Description

PJ73H Series are a set of three-terminal, low power, high voltage regulators implemented in CMOS technology. The series features extremely low quiescent current which is typically 2.0μA. They allow input voltages as high as 20V. The device provides large current with a significantly small dropout voltage.

PJ73H Series consists of a high-precision voltage reference, an error correction circuit, an over temperature protection circuit, and a current limited output driver. They are available with several fixed output voltages ranging from 1.8V to 5.5V. CMOS technology ensures low dropout voltage and low current consumption.

PJ73H Series are available in standard SOT-23、SOT-23-3 and SOT-89 packages. Standard products are Pb-free and Halogen-free.

Features

- Maximum Output Current: 500mA
- Input Voltage Range: 3V~20V
- Quiescent current: 2uA(Typ.)
- Dropout Voltage: 140mV@100mA (V_{OUT}=3.3V)
- Output Voltage Range:1.8V~5.5V
- PSRR: 70dB @10KHz
- Fast Load Transient Response
- Good Line Regulation: 0.01%/V
- Good Load Regulation: 5mV@1mA≤I_{OUT}≤50mA
- Soft Start

Applications

- Battery Powered Equipment
- Voltage Regulator for Microprocessor
- Voltage Regulator for LAN Cards
- Wireless Communication Equipment
- Audio/Video Equipment

Typical Application Circuit

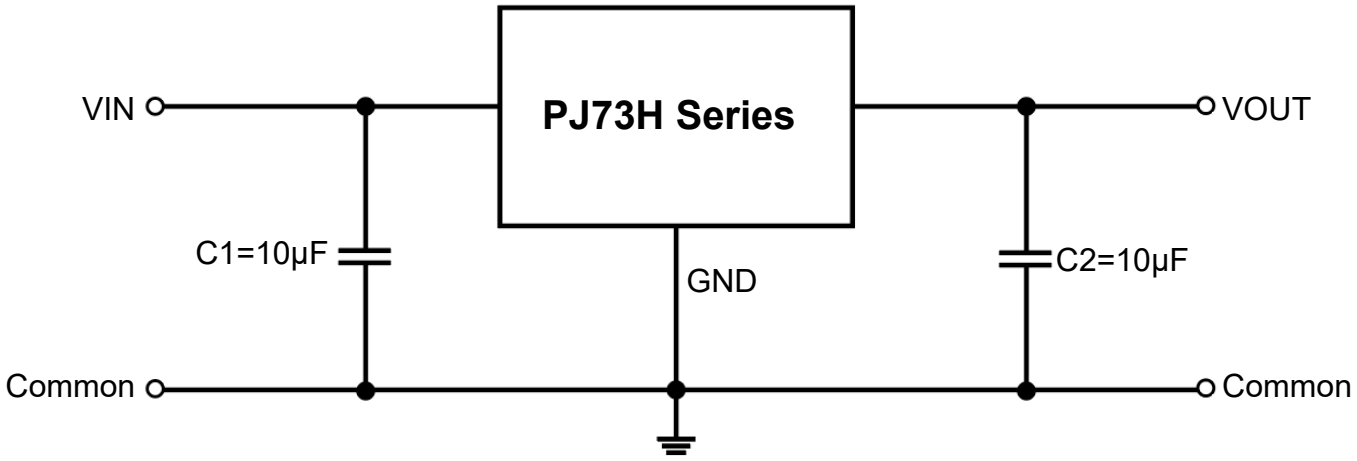

Pin Distribution

SOT-23

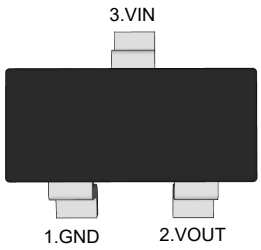

(Top View)

SOT-89

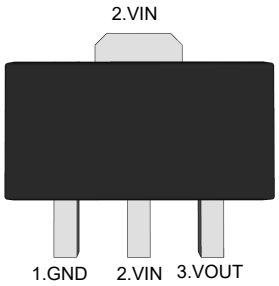

(Top View)

SOT-23-3

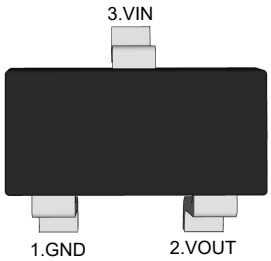

(Top View)

Functional Pin Description

Pin Name	Pin Function
VIN	Power Input Voltage
GND	Ground
VOUT	Output Voltage

Ordering Information

PJ73H □□□□

- Package Type
  SA:SOT-23
  SC:SOT-23-3
  SQ:SOT-89
- Output Voltage
  28 : 2.8V 30 : 3.0V 33 : 3.3V
  36 : 3.6V 40 : 4.0V 50 : 5.0V
- Output current tap
  M : 500mA

Orderable Device	Package	Reel (inch)	Package Qty (PCS)	Eco Plan Note	MSL Level	Marking Code
PJ73HM28SA	SOT-23	7	3000	RoHS & Green	MSL1	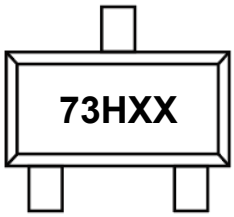 XX:Output Voltage e.g. 30:3.0V
PJ73HM30SA						
PJ73HM33SA						
PJ73HM36SA						
PJ73HM40SA						
PJ73HM50SA						
PJ73HM28SQ	SOT-89	7/13	1000/3000	RoHS & Green	MSL1	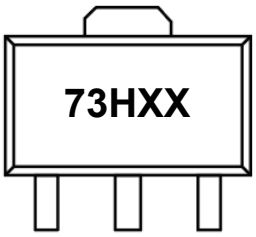 XX:Output Voltage e.g. 30:3.0V
PJ73HM30SQ						
PJ73HM33SQ						
PJ73HM36SQ						
PJ73HM40SQ						
PJ73HM50SQ						
PJ73HM28SC	SOT-23-3	7	3000	RoHS & Green	MSL3	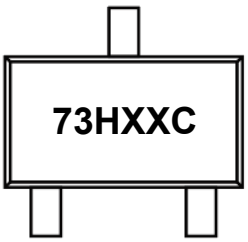 XX:Output Voltage e.g. 30:3.0V
PJ73HM30SC						
PJ73HM33SC						
PJ73HM36SC						
PJ73HM40SC						
PJ73HM50SC						

Note:

RoHS：PJ defines "RoHS" to mean semiconductor products that are compliant with the current EU RoHS requirements for all 10 RoHS substances, including the requirement that RoHS substance do not exceed 0.1% by weight in homogeneous materials.

Green：PJ defines "Green" to mean Halogen-Free and Antimony-Free.

Function Block Diagram

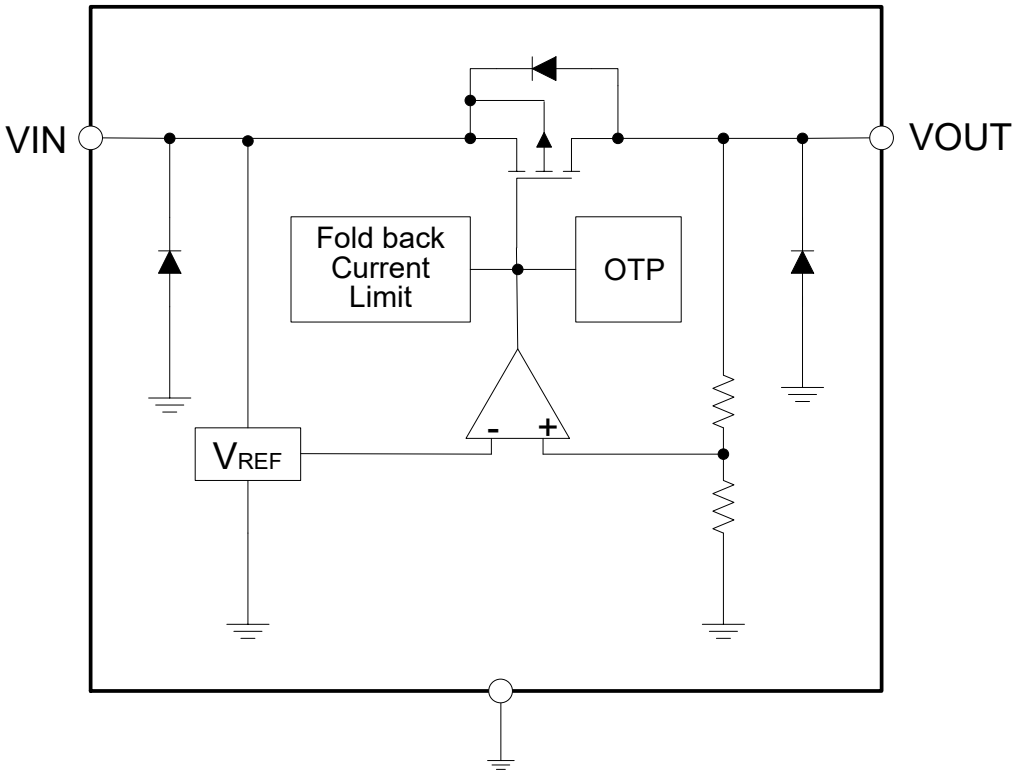

Absolute Maximum Ratings Note1

Ratings at 25℃ ambient temperature unless otherwise specified.

Parameter		Value	Unit
Input Voltage		-0.3~25	V
Output Voltage		-0.3~6	V
Power Dissipation	SOT-23	0.4	W
	SOT-23-3	0.45	W
	SOT-89	0.66	W
Thermal Resistance,Junction-to-Ambient	SOT-23	250	°C/W
	SOT-23-3	220	°C/W
	SOT-89	150	°C/W
Junction Temperature		-40~ +125	°C
Storage Temperature Range		-55~ +150	°C
Lead Temperature&Time		260°C,10S	--
Human Body Mode ESD Level (HBM)		5.5	KV

Note1: Exceeding or exposure to these absolute rating limits may damage the device permanently or affect its reliability

Recommended Operating Conditions

Parameter	Value	Unit
Supply Voltage	3~20	V
Operating Junction Temperature	0 ~ +125	°C
Operating Ambient Temperature	-40~ +85	°C

Electrical Characteristics

V_{OUT}=3.3V, T_A=25℃ , unless otherwise noted.)

Parameter	Symbol	Test Conditions	Min.	Typ.	Max.	Unit
Input Voltage	V_{IN}		3	--	20	V
Output Voltage Accuracy	ΔV_{OUT}	V_{IN}=V_{OUT}+2V, I_{OUT}=1mA	-2	V_{OUT}	+2	%
Output Current	I_{OUT}	Within $P_{D(Max.)}$	500	--	--	mA
Quiescent Current	I_Q	I_{OUT}=0A	--	2	--	μA
Dropout Voltage	V_{DROP}	V_{OUT}= 3.3V, I_{OUT}= 100mA, ΔV_{OUT}=2%	--	140	--	mV
		V_{OUT}= 5V, I_{OUT}= 100 mA, ΔV_{OUT}=2%	--	115	--	mV
Line Regulation	ΔV_{LINE}	V_{IN}= 5~12V, I_{OUT}=1mA	--	--	6	mV
Load Regulation	ΔV_{LOAD}	V_{IN}=12V, I_{OUT}=1~100 mA	--	--	20	mV
Short Circuit/Start Carrying Current	I_{SHORT}	VOUT Short to GND with 1Ω	--	60	--	mA
VOUT Temperature Coefficient	ΔV_{OUT} /(ΔT_A*V_{OUT})	I_{OUT}=1mA, 0°C ≤ T_A ≤ 120°C	--	90	--	ppm/°C
Power Supply Rejection Rate	PSRR	V_{IN}=5V_{DC}+0.5V_{P-P} f=10KHz, I_{OUT}=1mA	--	70	--	dB
Thermal shutdown Protection (OTP)	TSD	V_{IN}=V_{OUT} + 2 V, I_{OUT}=20mA		150		°C
OTP hysteresis	TSD_HYS			20		°C

Typical Electrical Curves

Test conditions: C_{IN}=1uF, C_{OUT}=10uF, V_{IN}=5V, V_{OUT}=3.3V,T_{OPR}=25℃(unless otherwise noted)

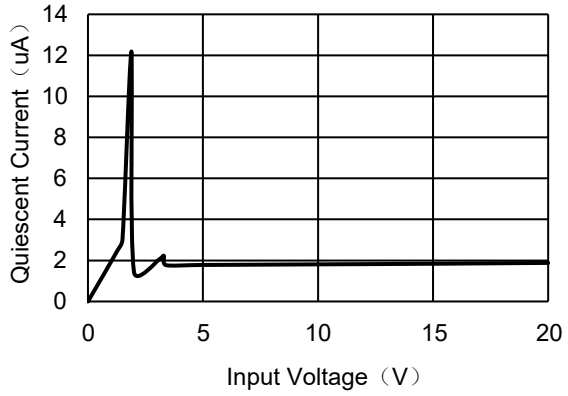

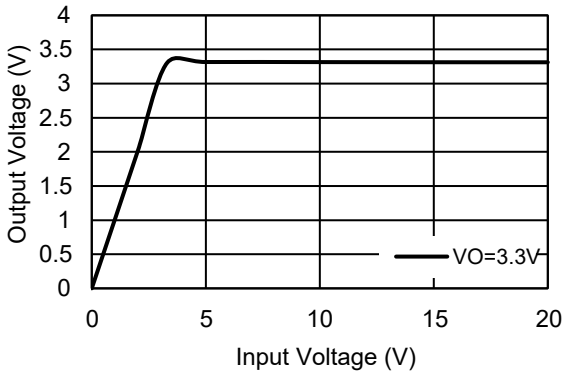

V_{OUT}=3.3V SOT-89

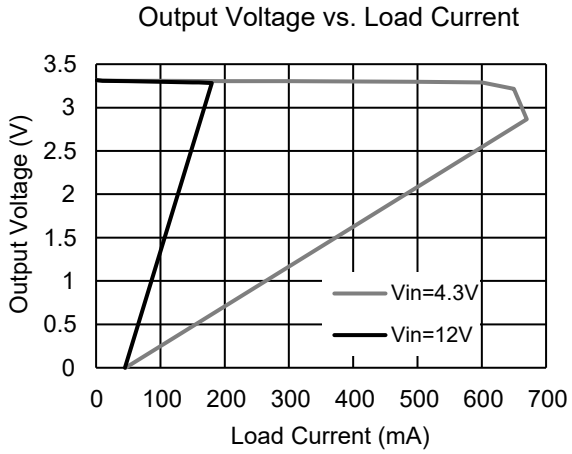

V_{OUT}=3.3V SOT-23-3

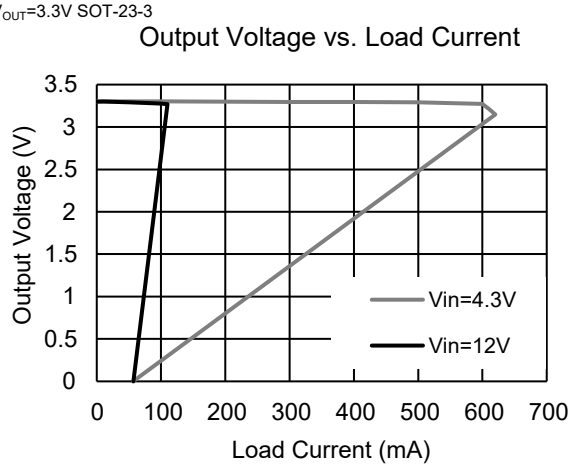

V_{OUT}=3V SOT-89

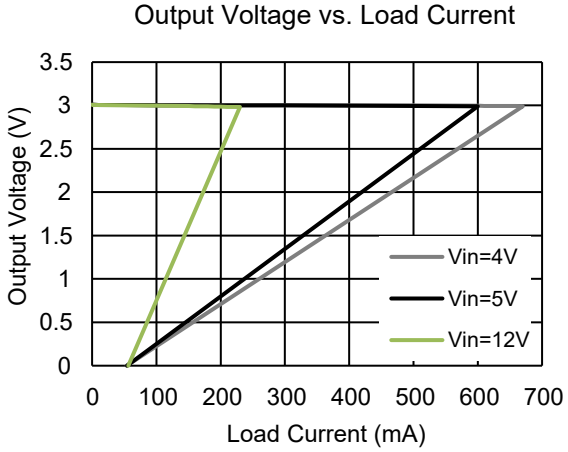

V_{OUT}=3.6V SOT-89

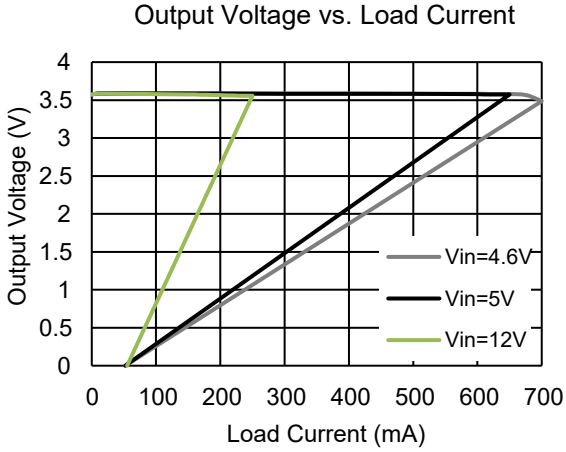

V_{OUT}=4V SOT-89

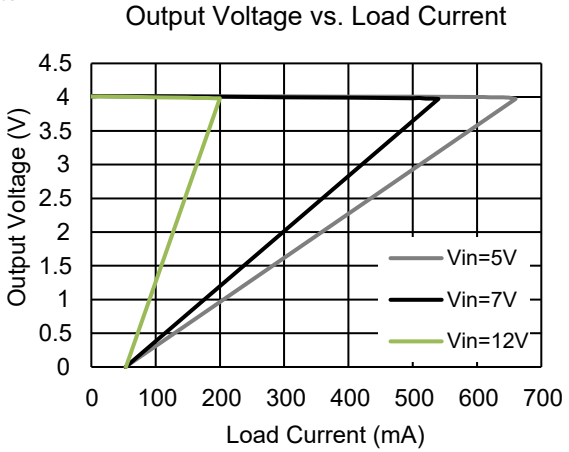

V_{OUT}=5V SOT-89

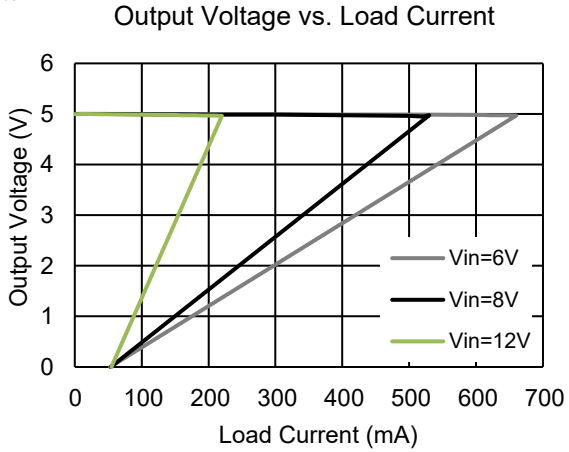

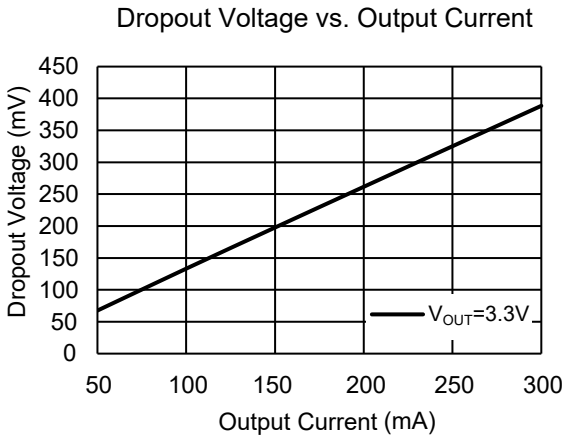

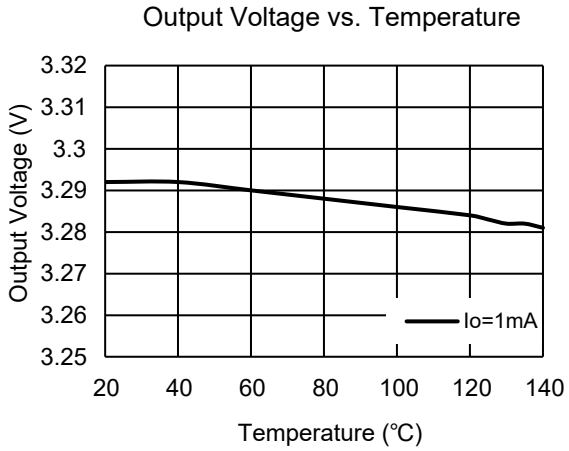

Power ON/OFF

CH1：VIN CH2：VOUT

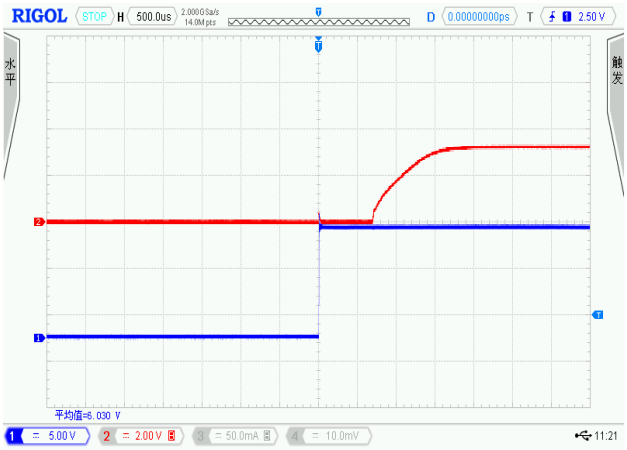

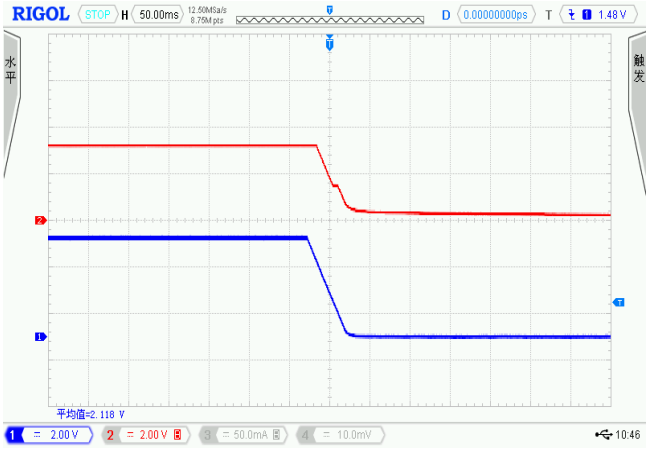

Line Transient

CH1:VIN CH2：VOUT

VIN=5V to 12V,Io=0A

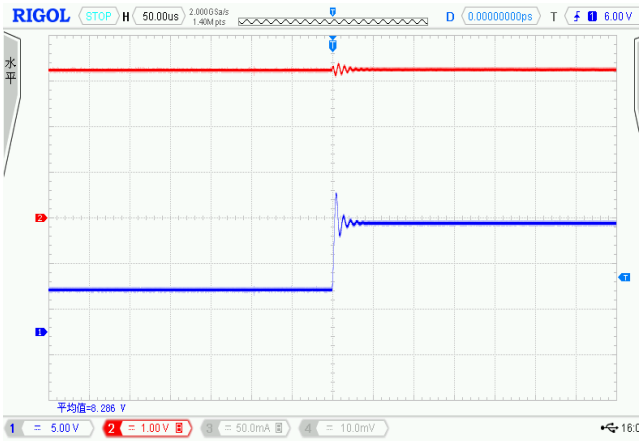

VIN=5V to 12V Io=10mA

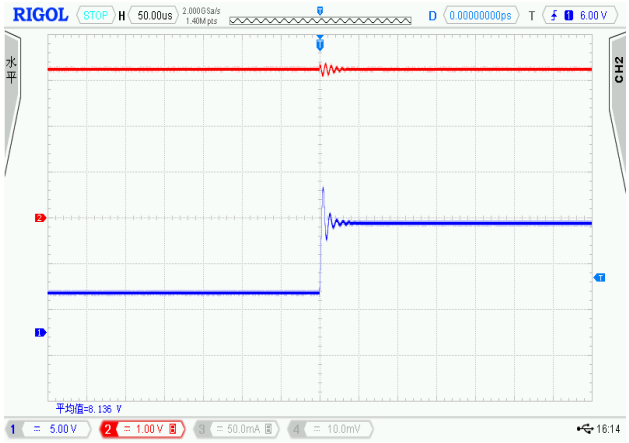

Load Transient

CH1：IOUT CH2：VIN CH3：VOUT

VIN=12V, VO=3.3V, C_{IN}=1uF, C_O=10uF Io=3mA to 100mA

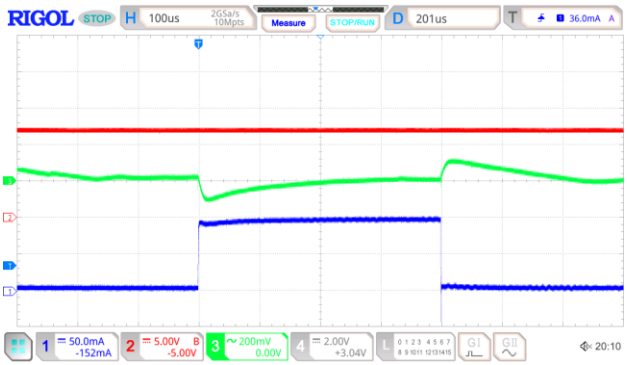

VIN=7V, VO=3.3V, C_{IN}=1uF, C_O=10uF Io=3mA to 100mA

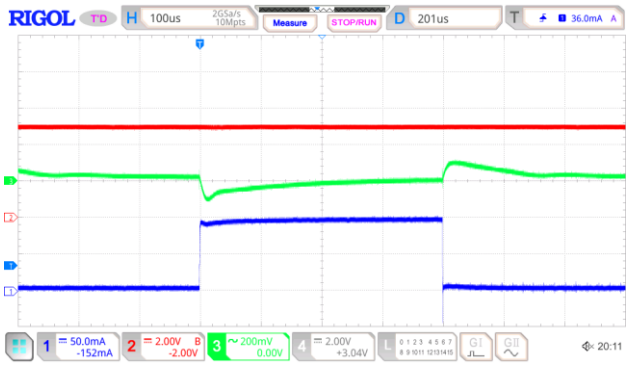

VIN=5V, VO=3.3V, C_{IN}=1uF, C_O=10uF Io=3mA to 500mA

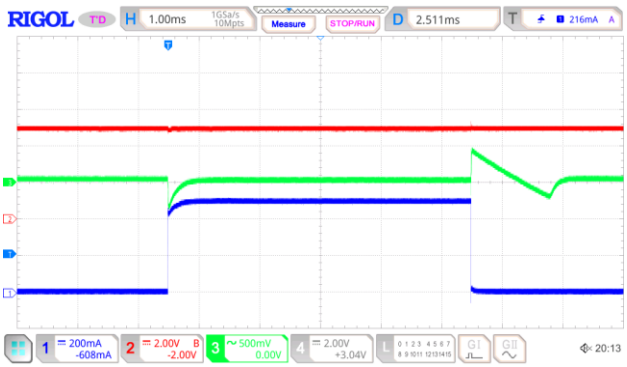

VIN=7V, VO=3.3V, C_{IN}=1uF, C_O=10uF Io=3mA to 500mA

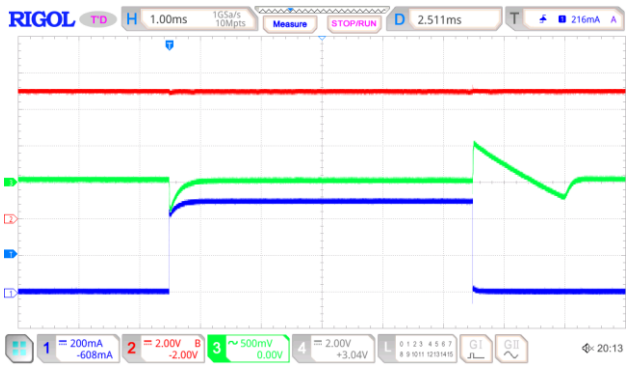

Package Outline

SOT-23
Dimensions in mm

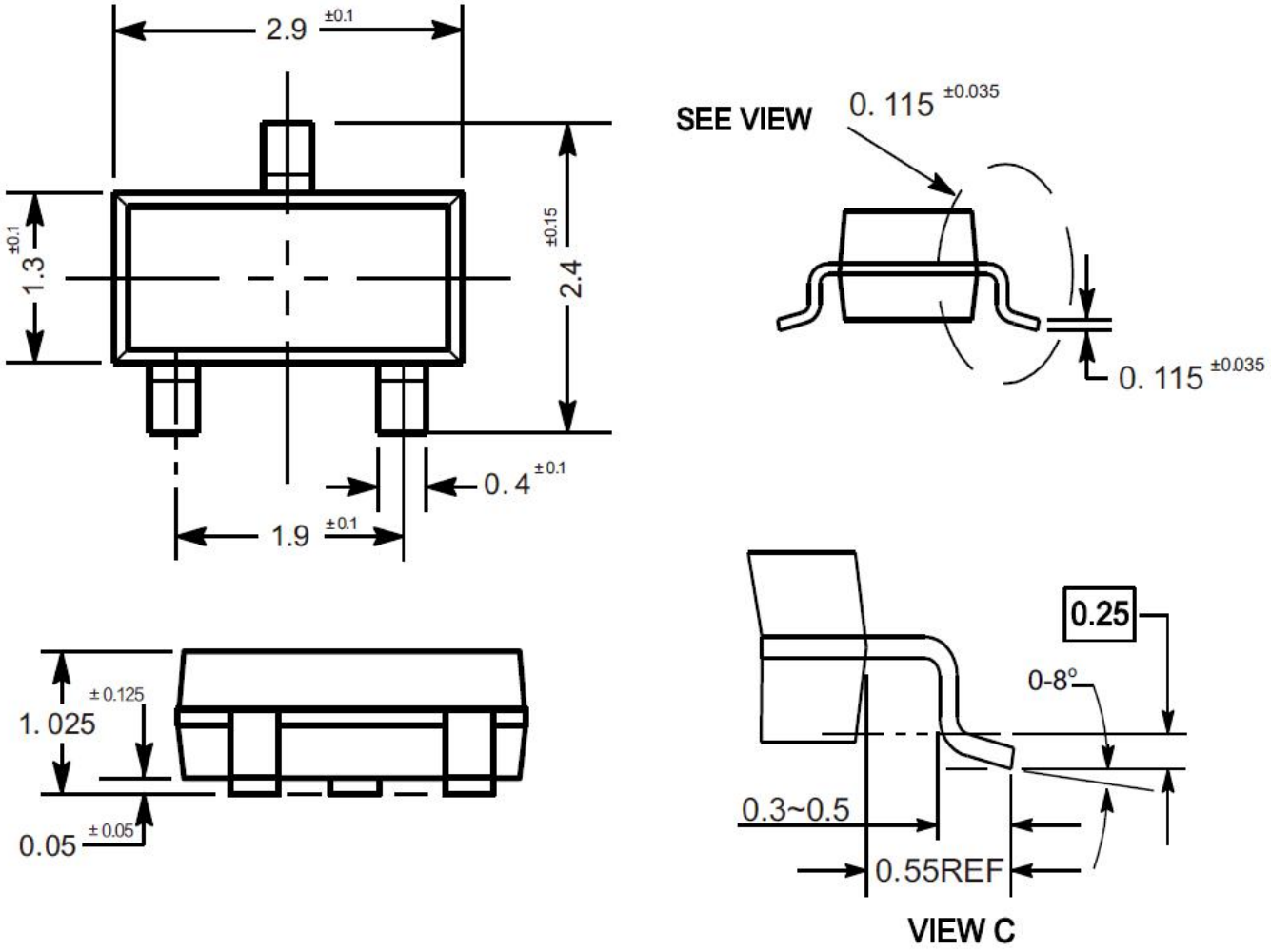

Package Outline

SOT-23-3
Dimensions in mm

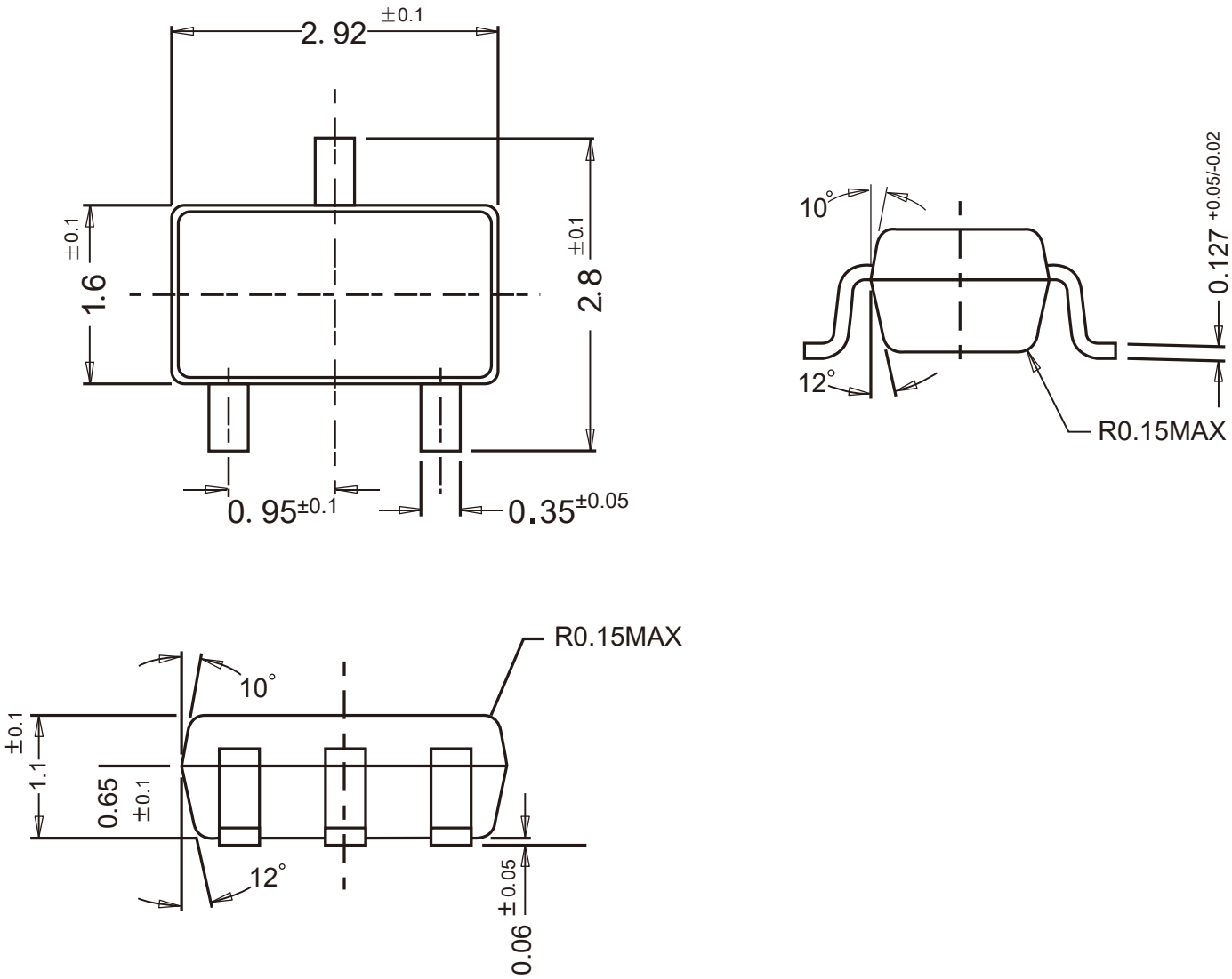

Package Outline

SOT-89
Dimensions in mm

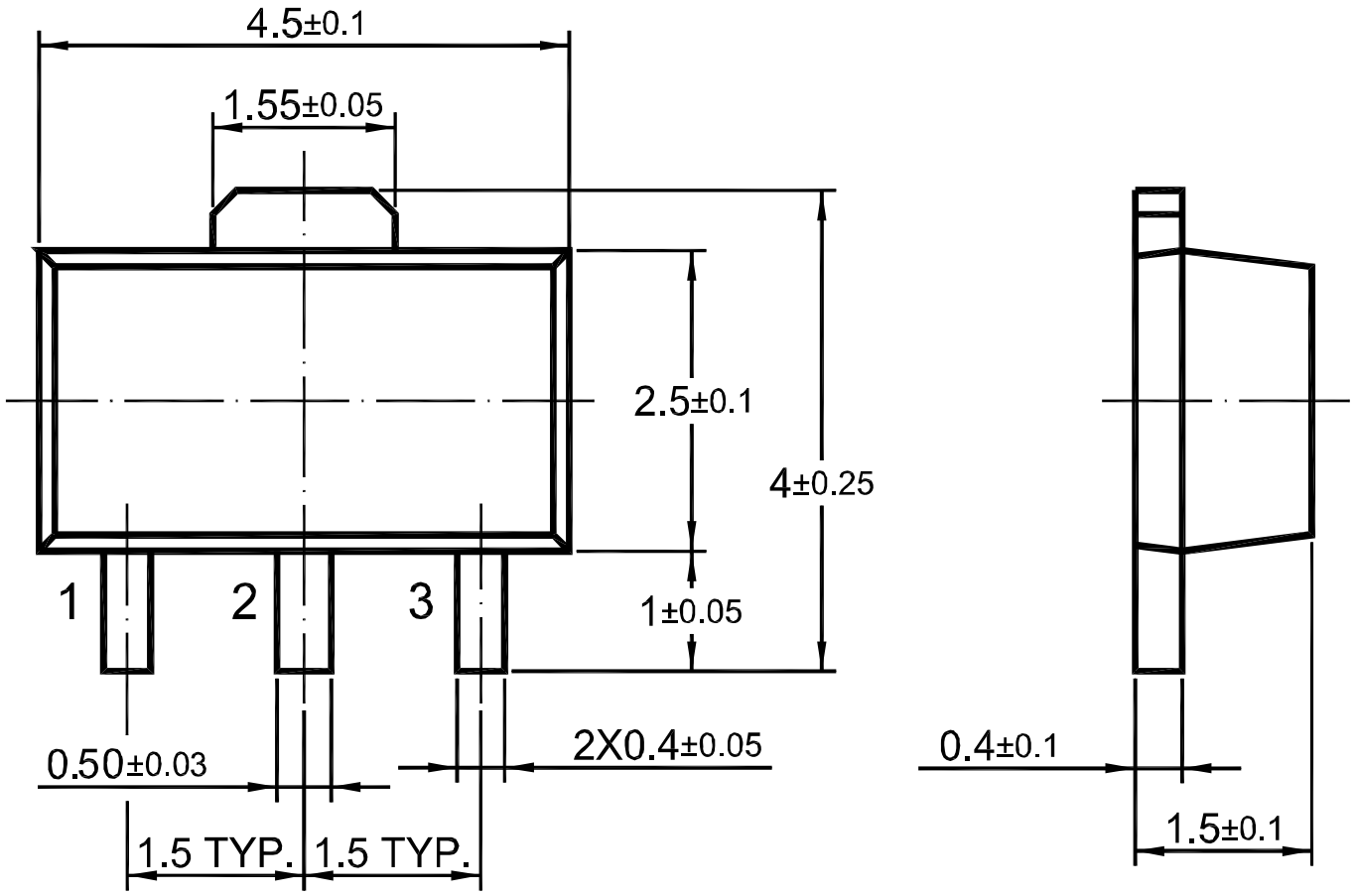

Package Outline
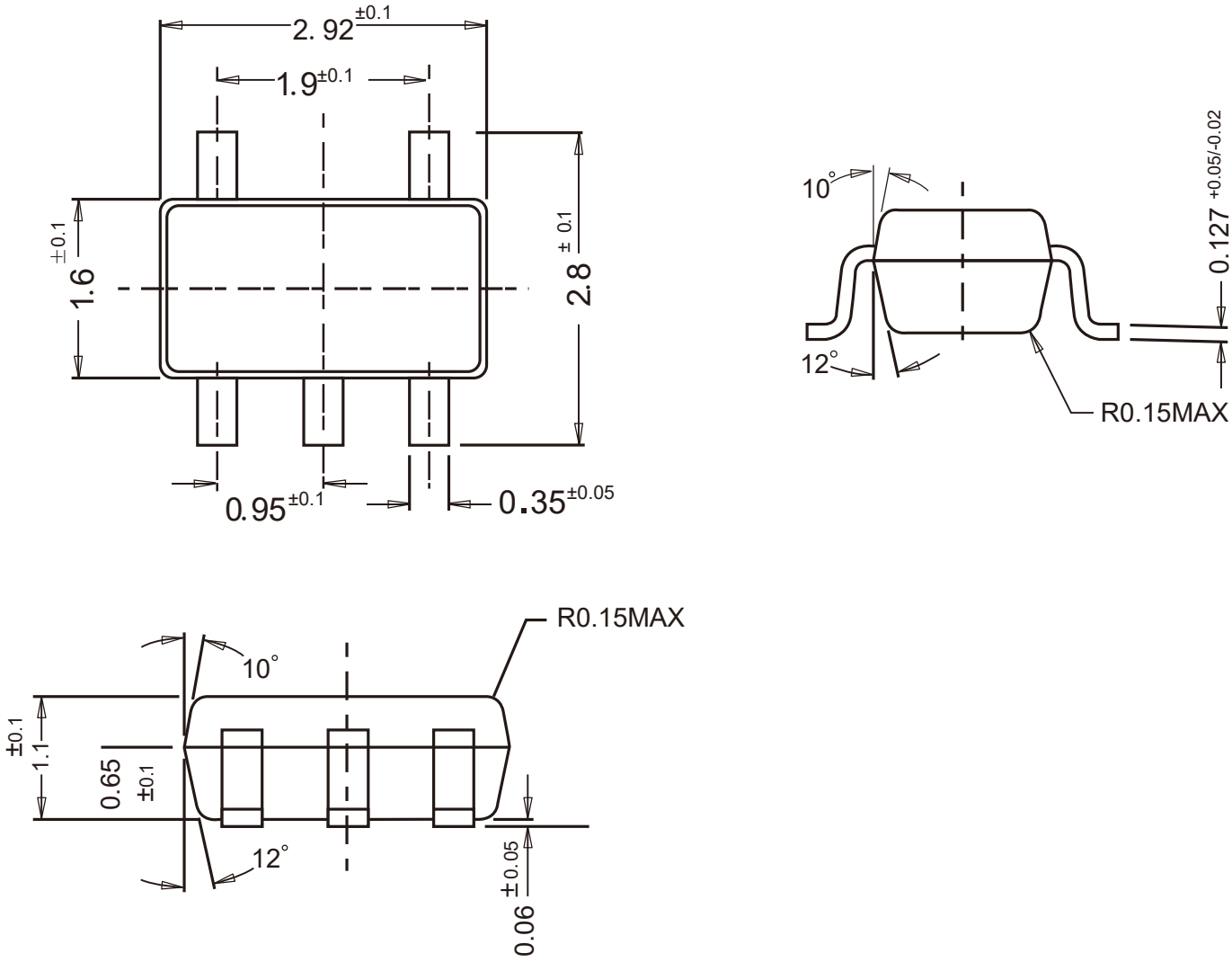
SOT-23-5
Dimensions in mm